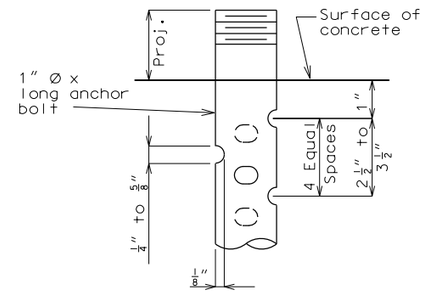

SWEDGE ANCHOR BOLT DETAIL

GENERAL NOTES:

Anchor bolts for Type C bearings shall be 1"Ø ASTM F1554 Grade 55 swedged bolts, with no heads or nuts and shall extend 10" into the concrete. Swedging shall be 1" less than the extension into the concrete. Anchor bolts shall be set in the drilling holes or in the anchor bolt wells and grouted prior to the erection of steel. The top of anchor bolts shall be set approximately 1/4" below the top of bearing.

Anchor bolts shall be coated with a minimum of two coats of inorganic zinc primer to provide a total dry thickness of 4 mils minimum, 6 mils maximum, or galvanized in accordance with Sec 1081.

Weight of the anchor bolts for bearings are included in the weight of the Fabricated Structural Steel.

Indicates machine finish surface.

Shop drawings are not required for the lead plates and the preformed fabric pads.

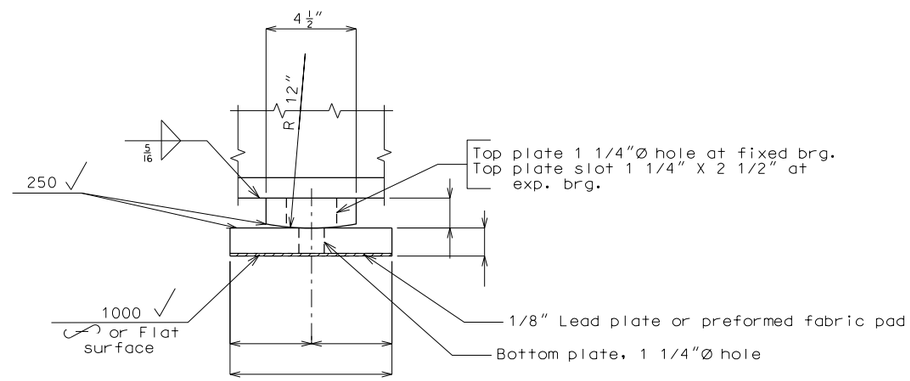

SIDE VIEW

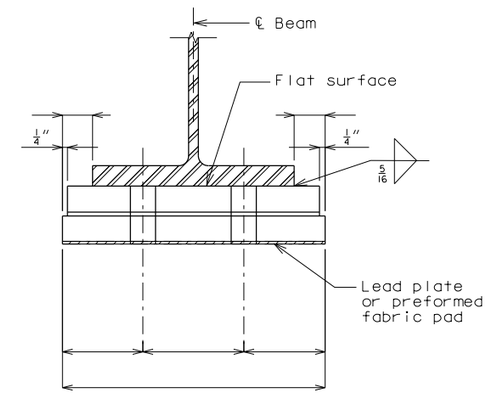

END VIEW

TYPE C BEARINGS

(Estimated Weight pounds)

"THIS MEDIA SHOULD NOT BE CONSIDERED A CERTIFIED DOCUMENT."

DATE PREPARED 2/25/2021	
ROUTE *	STATE MO
DISTRICT BR	SHEET NO. *
COUNTY *	
JOB NO. *	
CONTRACT ID.	
PROJECT NO.	
BRIDGE NO. BRG01	

DATE	DESCRIPTION

MISSOURI HIGHWAYS AND TRANSPORTATION COMMISSION
105 WEST CAPITOL
JEFFERSON CITY, MO 65102
1-888-ASK-MODOT (1-888-275-6636)

IF A SEAL IS PRESENT ON THIS SHEET IT HAS BEEN ELECTRONICALLY SEALED AND DATED.

Detailed
Checked

Note: This drawing is not to scale. Follow dimensions.

Sheet No. of